BLE WEARABLE HARDWARE DESIGN GUIDE

❖ Components List

- CR2032 holder
- Voltage Regulator
- 470µF low ESR capacitor
- 10µF ceramic
- 0.1µF ceramic
- optional Schottky diode
- ESP32-C3
- chip antenna
- 2 LEDs (2.2k resistors)
- 2 buttons

❖ Schematics

1. Power

- CR2032 Battery: Nominal 3.0V (2.0v – 3.2v operating range), nominal capacity 220 - 240mAh.
- Estimated Battery Life.

Battery Connection Flowchart

- CR2032 +
  |
- 470µF (Bulk Decoupling Capacitor)
  |
  Voltage Regulator (LDO)
  |
- ESP32 3V3 rail

Power Source Decoupling

- A 470 µF Low-ESR Bulk Capacitor connected between VBAT and Ground.
- Recommended: 470 µF should also have a smaller ceramic (0.1 µF) in parallel.
- This large bulk capacitor supplies instantaneous charge during the ESP32-C3's peak radio-on current spikes (up to 80 mA for ~100 µs). A low-ESR type (polymer or MLCC rated at ≥100 mA) is required to supply this current without excessive voltage droop

Voltage Regulator

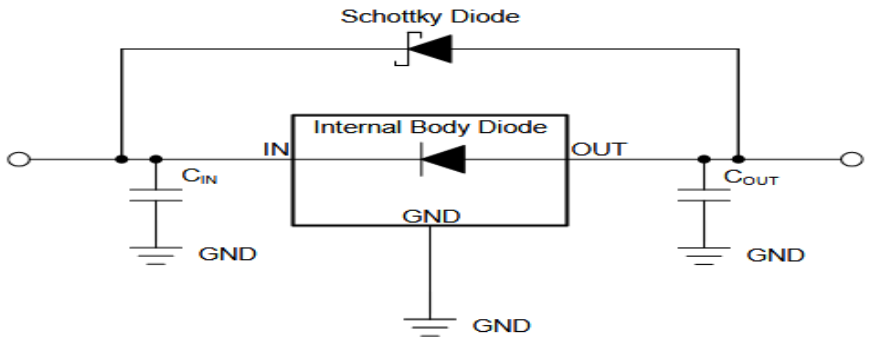

- The LDO regulates the battery voltage down to a stable 3.0 V VCC rail.
- LP2985-30 / MIC5219 LDO Recommended
- Minimum value for C_{in} is 1 µF
- Minimum value for C_{out} is 2.2 µF
- Connect ON/OFF pin to VCC if voltage regulated is needed to be on All the time
- If reverse current flow is expected in the application, use external protection (Schottky diode) to protect the device.
- BAT54 Schottky diode recommended

2. ESP32-C3 Microcontroller

- PCM_Espressif Library ESP32-C3 Symbol
- Compatible with ESP32-C3-FN4 Chip
- 3.3V MCU
- BLE Feature

Connections:

- **Power Pins**
  - **VCC Rail ---> VDD3P3 (pin)**

|

10 µF capacitor	0.1 µF capacitor	1 µF capacitor
|	|	|
GND	GND	GND

  - **VCC Rail ---> VDDA (pin)**

|

10 nF capacitor	0.1 µF capacitor
|	|
GND	GND

- **VCC Rail ---> VDD3P3_RTC (pin)**

  |

  0.1 µF capacitor

  |

  GND
- **VCC Rail ---> VDD3P3_CPU (pin)**

  |

  0.2 µF capacitor

  |

  GND

- **GND pin -> GND Rail**

- **Enable Pin**
  - Pulled HIGH via VCC Rail
  - VCC Rail -> 10 kΩ pull-up resistor -> CHIP_EN (pin)
  - When held HIGH the ESP32-C3 operates normally; when pulled LOW the chip enters reset.

- **Boot Pin (GPIO9 Boot-Mode Strap)**
  - Pulled HIGH via VCC Rail for normal mode,
  - pull low to enter UART download Mode
  - VCC Rail -> 10 kΩ pull-up resistor -> GPIO 9 (pin)

3. **RF Circuit (Antenna Chip)**
   - Selected Antenna chip over PCB trace as chip works better over metal, beginner friendly and easier to work with in small PCB design
   - For the chip matching circuit, it must be placed close to the chip. A CLC structure is preferred
   - The chip antenna radiates the BLE signal.
   - It must be positioned at the PCB edge with a mandatory copper keepout zone beneath and around it, as specified by the antenna manufacturer's datasheet.
   - Capacitors (C1, C2) and Inductor (L1) value not decided until Antenna chip component is selected.

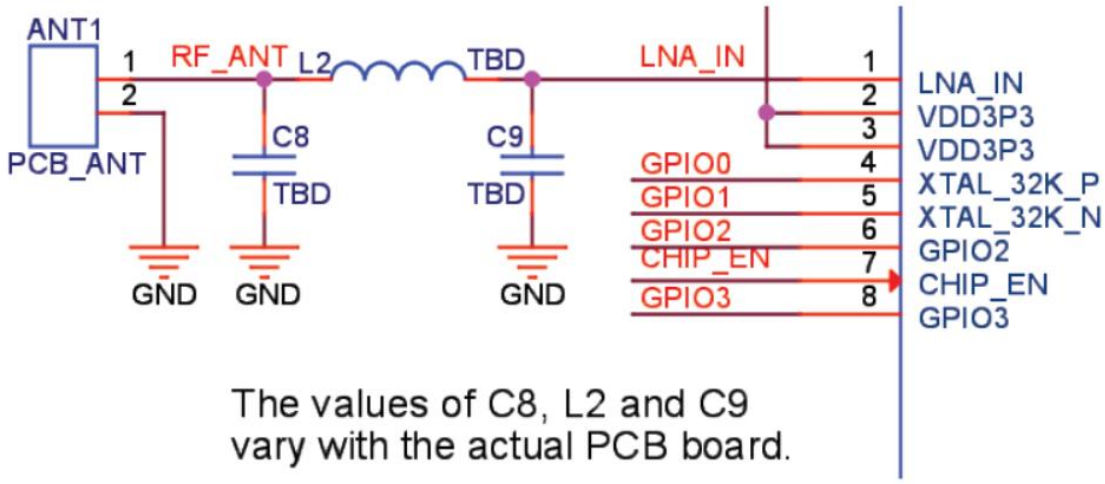

Fig. 7: ESP32-C3 Schematic for RF Matching

4. **Buttons**
   - Two tactile SPST momentary switches are used.
   - One terminal connects to the GPIO input, the other to GND.
   - Hardware Debounce was applied
     - VCC -> 10 kΩ pull-up resistor -> GPIO (pin) -> Button -> GND

       |

       Capacitor

       |

       GND
     - Without debounce filtering, mechanical contact bounce generates multiple GPIO interrupts per button press. The 100 nF capacitor forms an RC low-pass filter with the 45 kΩ pull-up resistor giving a time constant of approximately 4.5 ms — sufficient to suppress typical switch bounce (< 2 ms)

5. LEDs
   - Two LEDs provide visual feedback.
   - Each is driven from a GPIO pin through a series current-limiting resistor.
   - The LEDs are wired in a common-anode configuration: the anode connects to VCC and the cathode connects through the resistor to the GPIO pin. The LED lights when the GPIO is driven LOW (sink configuration).

   Current Calculation

     - LED current with 2.2 kΩ at 3.0 V (typical green/red LED, Vf ≈ 2.0 V)
     - I = (VCC – Vf) / R = (3.0 V – 2.0 V) / 2200 Ω = 0.45 mA
     - This is intentionally dim — suitable for wearables to extend battery life.